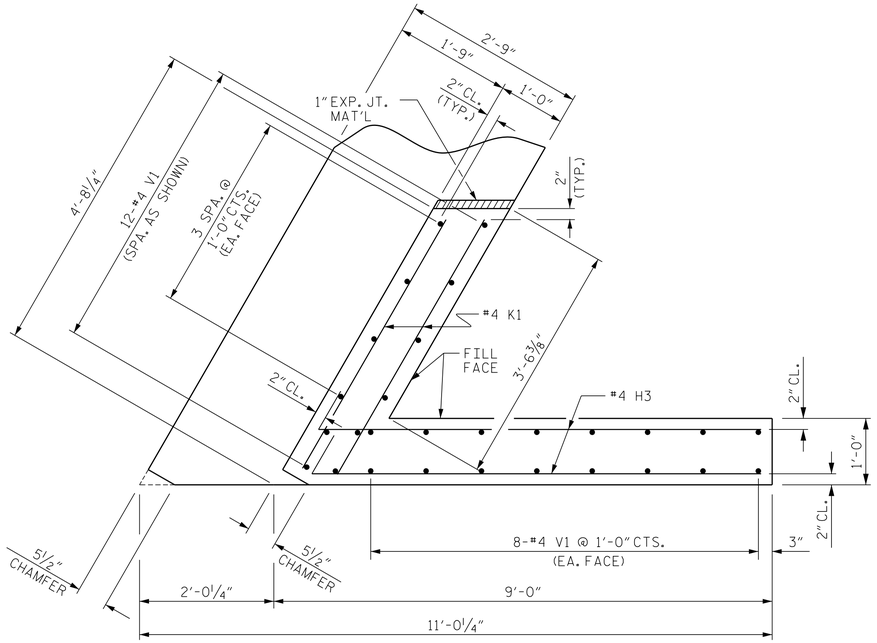

PLAN OF WING (W1)

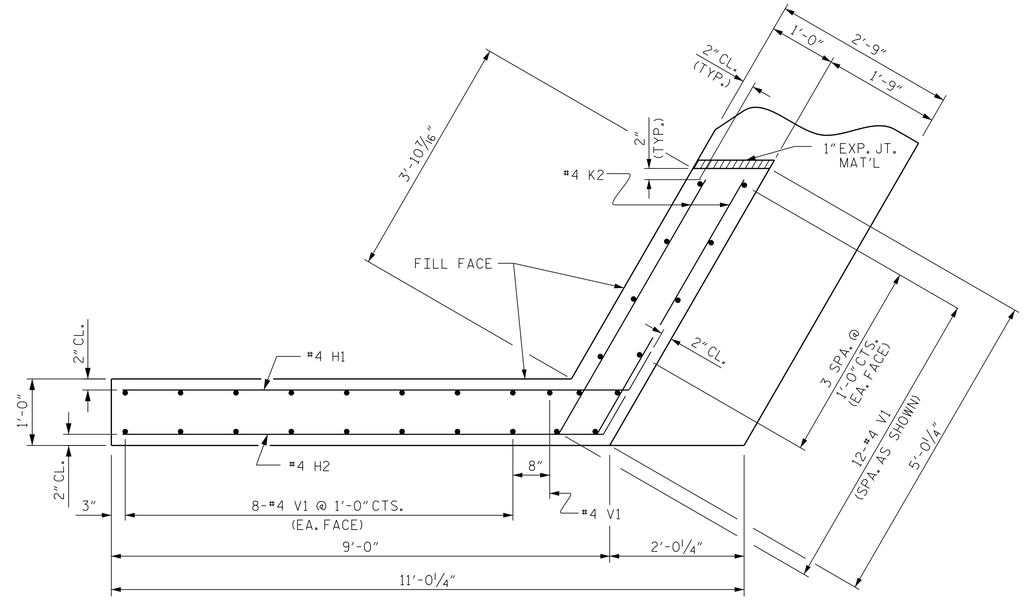

PLAN OF WING (W2)

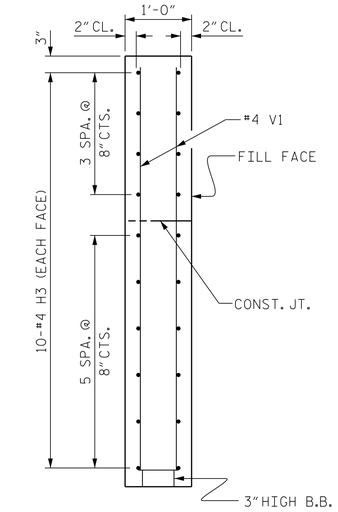

SECTION X-X

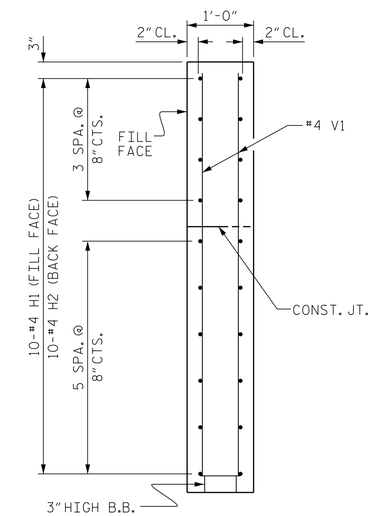

SECTION Y-Y

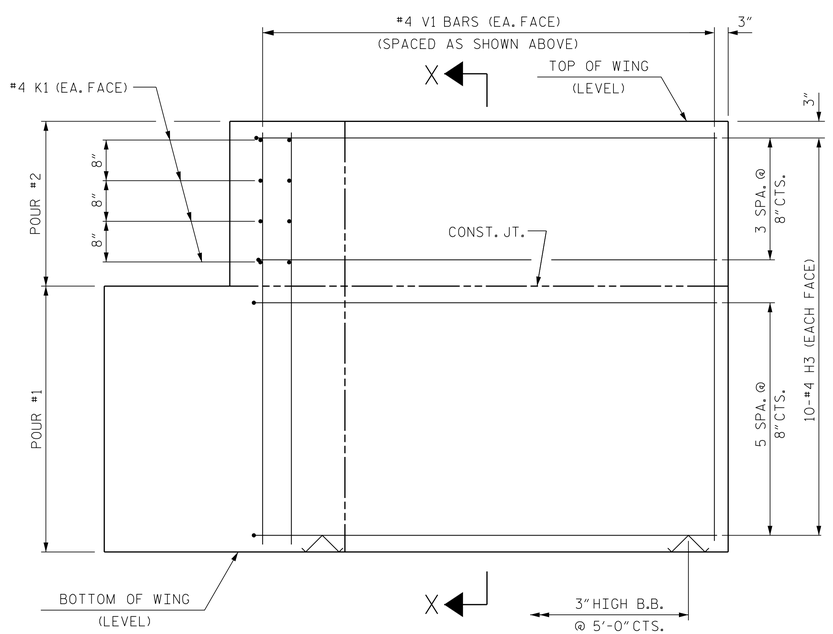

ELEVATION OF WING (W1)

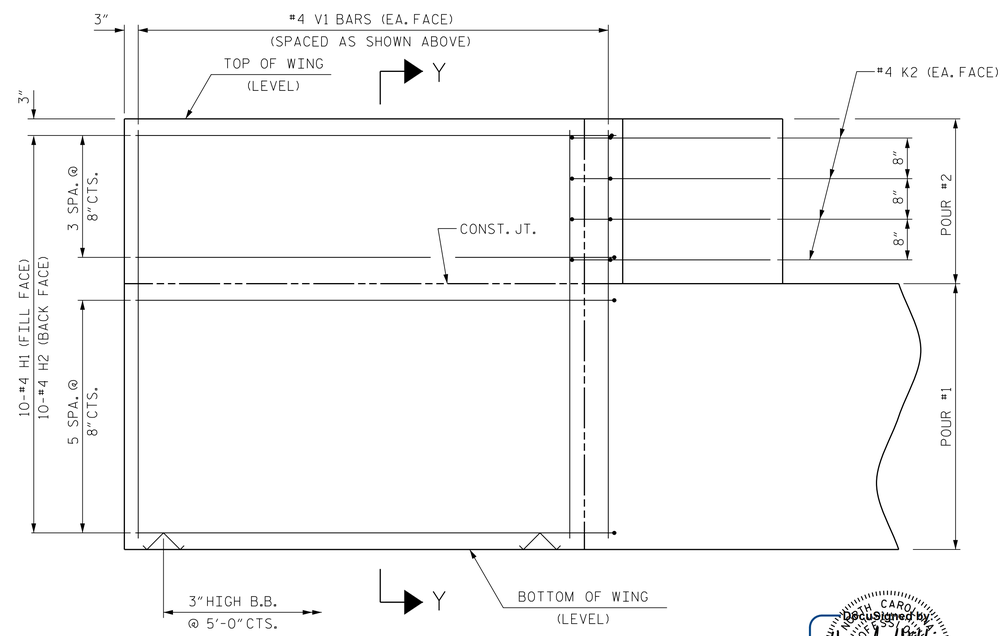

ELEVATION OF WING (W2)

WING DETAILS

Decusigned by: Hardy Willis 2017 CC237FCF0223482... 6/4/2026

DOCUMENT NOT CONSIDERED FINAL UNLESS ALL SIGNATURES COMPLETED

PROJECT NO. B-5929

HENDERSON COUNTY

STATION: 13+45.76 -L-

SHEET 2 OF 3

STATE OF NORTH CAROLINA
DEPARTMENT OF TRANSPORTATION
RALEIGH

SUBSTRUCTURE
END BENT No.1
WING DETAILS

ASSEMBLED BY :	WC	DATE :	6-2017
CHECKED BY :	RTS	DATE :	7-2017
DRAWN BY : WJH	12/11	REV. 4/15	MAA/TMG
CHECKED BY : AAC	12/11		

Johnson, Mirmiran, & Thompson Inc.
1318 Patton Ave Suite F,
Asheville, NC, 28806
License No: C-3097

REVISIONS						
NO.	BY:	DATE:	NO.	BY:	DATE:	
1			3			
2			4			

SHEET NO. S-18

TOTAL SHEETS 25

STD. NO. EB_33_120S4